Ta22 Wiring Diagram

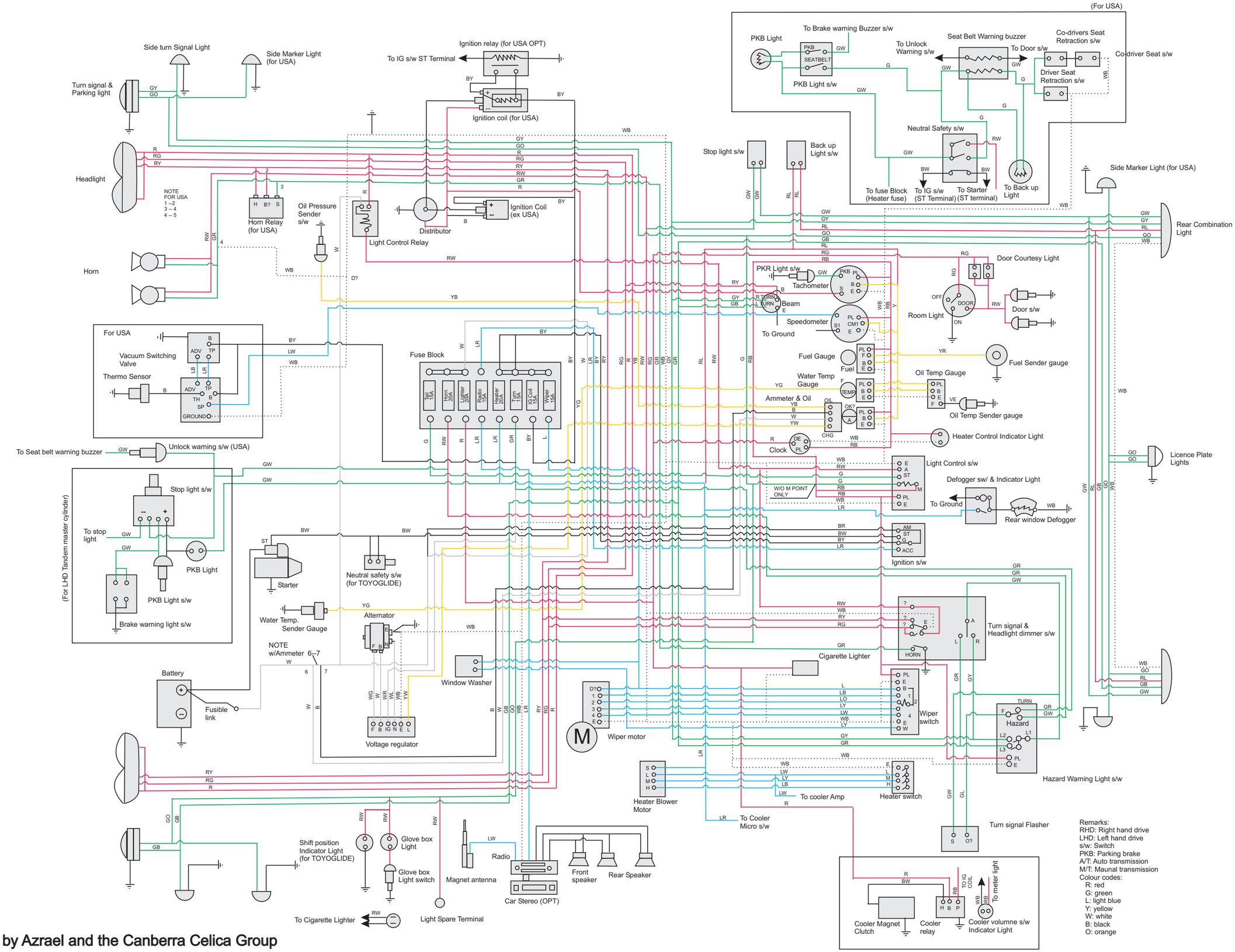

Proudly brought to you by Azrael and the Canberra Celica Group