Ta22 with 2TGEU

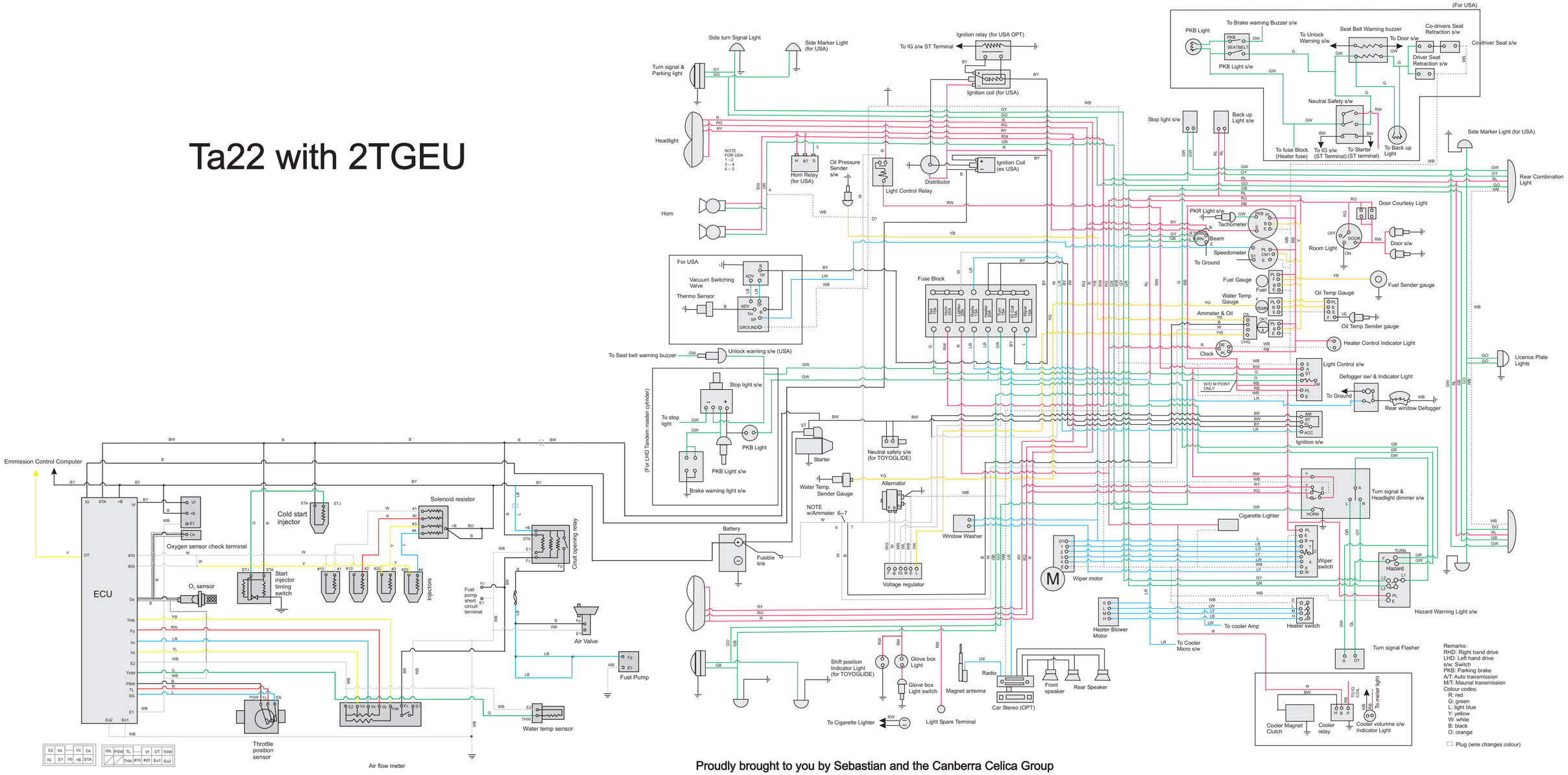

Proudly brought to you by Sebastian and the Canberra Celica Group